Technische Universität München
Department of Civil, Geo and Environmental Engineering
Chair of Computational Modeling and Simulation

Technical Report
Model Exchange between Revit and Allplan using IFC: a Case Study for a Bridge Model

Maciej Trzeciak[1], André Borrmann[2]

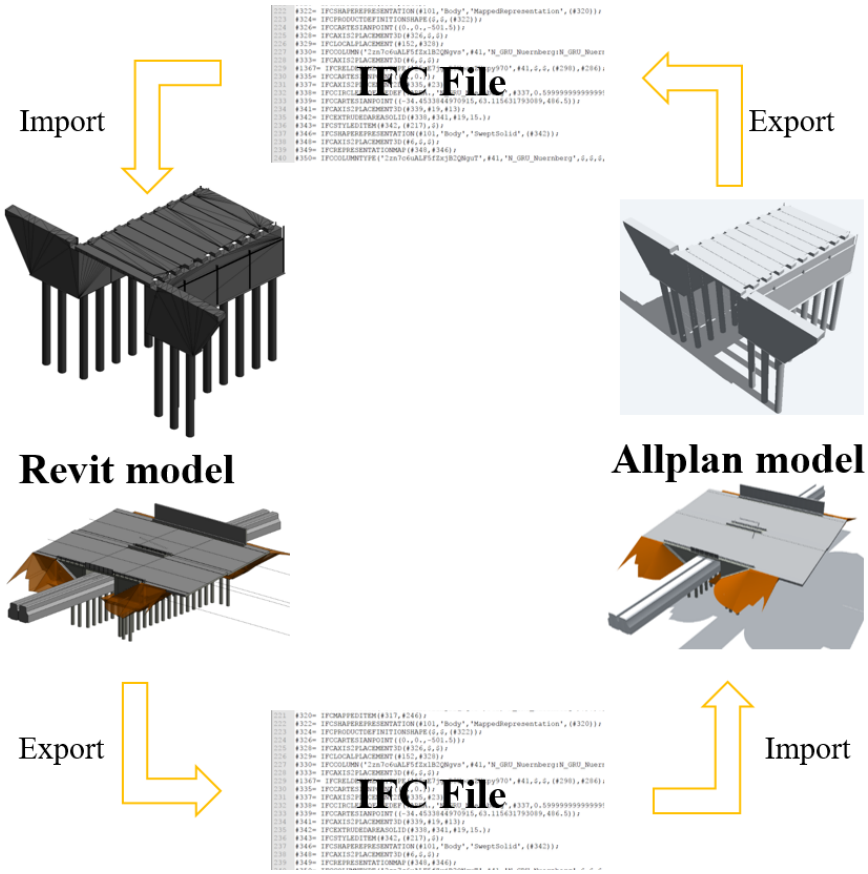

Munich, Germany 2018

[1] Research Assistant and Ph.D. Candidate, Chair of Computational Modeling and Simulation, Technische Universität München, Arcisstrasse 21, 80333 Munich, Germany
[2] Professor, Chair of Computational Modeling and Simulation, Technische Universität. München, Arcisstrasse 21, 80333 Munich, Germany

Table of Contents

1 Introduction

1.1 Background

BIM4INFRA is a project aimed at implementation of Building Information Modeling (BIM) in infrastructure projects by the Federal Ministry of Transport and Digital Infrastructure (Bundesministerium für Verkehr und digitale Infrastruktur) in Germany. As part of the BIM road map, pilot projects have been carried out. One of them is a design for bridge BW 27/1 along the A99 motorway which has been commissioned by The Highway Administration of South Bavaria (Autobahndirektion Südbayern).

As part of the process, the conceptual design for the bridge was developed. The corresponding BIM model was created using Autodesk Revit. In the next project phase, the detailed design was prepared on the basis of the conceptual design using Nemetschek Allplan. To transport the model information between the two design applications, the vendor-neutral data format Industry Foundation Classes (IFC) was used. Vendor-independent data formats play an integral role of the German BIM 2020 mandate to preserve fair competition on the software market and to avoid any vendor lock-in. Both Revit (Autodesk) and Allplan (Nemetschek Group) are commercial BIM design applications which support data exchange via IFC. This means that they both provide the import and export interfaces, which basically translate their proprietary data models into the IFC-compliant model and vice versa.

The exchange scenario “Design-to-Design” is one of the most demanding, as it requires to transport the geometry in a way that allows its modifiability in the receiving application. The IFC provides support for the necessary implicit geometry, including sweeps and CSG operations. However, particular attention has to be paid to the correct configuration of both the export and import functionalities of the software products to make use of these capabilities of IFC.

1.2 Purpose of the report

The purpose of this technical report is to provide BIM practitioners with information on the current state of the modifiability of geometry after the exchange of a BIM model between Revit and Allplan using the vendor-neutral format Industry Foundation Classes (IFC). Furthermore, it explains related basics, including export and import options and their configuration.

This report is based on the analysis of BIM models produced by commercial engineering consultancies. Therefore, it provides the reader with hands-on experience regarding the design-to-design exchange of models. The geometry of all the elements does not come from the pre-defined types of elements in the respective BIM design applications. Instead, the geometry was created by the engineering consultancies from scratch, which causes additional challenges.

1.3 Structure of the report

The report consists of two main parts. The first part, presented in chapter 2, describes all the necessary basics which the reader should be familiar with to understand the exchange of the BIM model between Revit and Allplan (the order matters) using IFC. It presents the export options of

Revit and the import options of Allplan along with their configuration. Moreover, it provides an overview of how the analysis presented in the report has been carried out and the outcome of the analysis. The second part, presented in chapter 3, has the same structure as chapter 2 and describes the analogous process for the exchange of another BIM model between Allplan and Revit (the order matters) using IFC. Finally, chapter 4 summarizes the results of report.

1.4 Software and Versions

Table 1.1 shows the software applications along with their versions which have been used in the report.

Software	Version
Autodesk Revit	2018.2
Nemetschek Allplan	2018-0-2
Solibri Model Viewer	9.8.17

Table 1.1 Software applications and their versions used in the report

2 Revit-IFC-Allplan Exchange

Chapter 2 describes the whole process of exchanging the BIM model of the bridge created in the conceptual design described in section 1.1. The model is exchanged between Revit and Allplan (the order matters) using IFC. Section 2.1 deals with the basics needed to understand the report. There are described the export options available in Revit and the import options available in Allplan. Besides, the reader is introduced to the geometric modifiability cases which occur after importing the IFC model into Allplan. Section 2.2 describes how the analysis has been carried out, including the settings of the export and import. Finally, section 2.3 depicts the results obtained during the Revit-to-Allplan exchange using IFC.

2.1 Basics

2.1.1 Export Options in Revit

The Export options described in this section focus on the geometry of elements.

2.1.1.1 "Export IFC" dialog box

Revit allows to export its project model into an IFC file using the "Export IFC" dialog box (File → Export → IFC) as shown in Figure 2.1. The export options can be configured from the dialog box, however, only a few of them have a potential impact on the geometry of entities in an IFC file and their subsequent modification in Allplan.

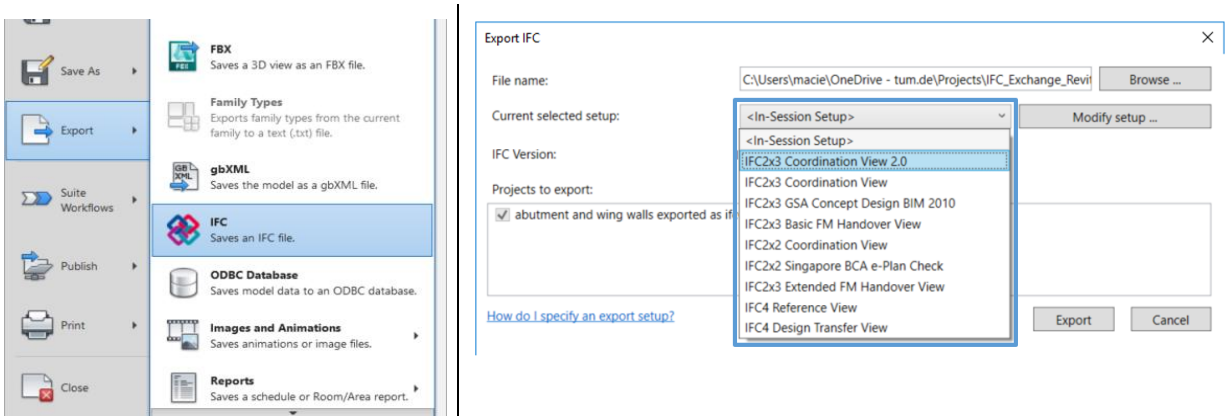

Figure 2.1 Revit: IFC export settings. The figure based on [1]

The "Current selected setup" gives the user a choice between a few predefined options of IFC version and Model View Definition (MVD). The most recent "IFC 4 Design Transfer View" would be the most appropriate as it was designed to allow geometric modifications of a model after its hand-over to another design application [2]. However currently, Allplan does not support importing the IFC 4 version, therefore "IFC 2x3 Coordination 2.0" is the option used in this report. The "IFC 2x3 Coordination 2.0" is a default and certified version which is generally supported by other BIM authoring applications, including Allplan.

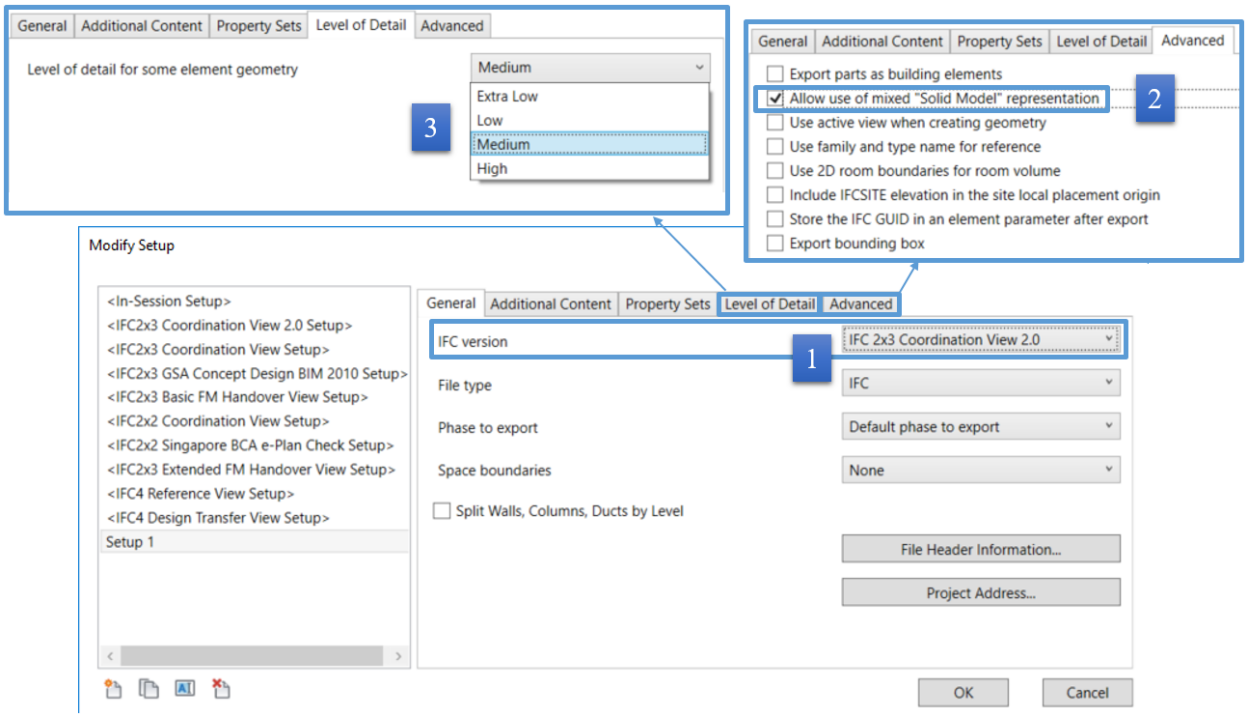

Figure 2.2 Revit: Customized setup for IFC export. The figure based on [1]

Besides this, the user can create a customized setup by clicking "Modify setup" on the right side of the "Export IFC" dialog box. This gives additional settings for adjusting the export (Figure 2.2). The user should select the desired IFC option (marked with "1") as described in the previous paragraph. The "allow use of mixed "Solid Model" representation" allows for mixing BRep and extrusion geometries for an entity [3] (marked with "2"). In the case study performed, however, the application of this option does not change the geometric modifiability of the entities presented in section 2.3 of this report. Finally, "level of detail for some element geometry" (marked with "3") controls the level of tessellation. High level means more accurate Brep and profile representations [3]. It does not change the type of geometry representation however.

2.1.1.2 Revit-IFC mapping

The report refers to geometric modifications of elements imported from an IFC file. However, the geometric modifiability of elements in Allplan does not depend solely on their geometric representations but on their component types as well. Therefore, this section explores the ways of exporting elements to desired component types (IFC classes) as described in the IFC schema (IfcWall, IfcColumn, and so on).

Mapping File

By default, the mapping of Revit instances to IFC building objects is controlled by the "IFC Export Classes" dialog box (File → Export → Options → IFC Options) shown in Figure 2.3. The customized settings there can be saved to the IFC Mapping File [4] (Figure 2.4).

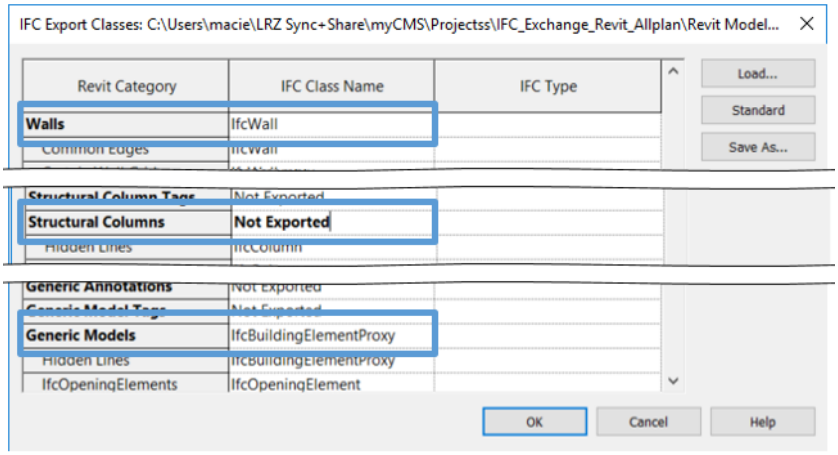

Figure 2.3 Revit-IFC mapping dialog box

As it can be seen in Figure 2.3, category “Walls” is mapped to IFC class “IfcWall”. This means that all instances of category “Walls” will be exported to an IFC file as objects of class “IfcWall”. If a certain category is not supposed to be exported (in this example Structural Columns), “Not Exported” must be typed in in the corresponding IFC class name. By default, all “Generic Models” instances are mapped to objects of class “IfcBuildingElementProxy”. As section 2.3 shows, such objects are geometrically unmodifiable after importing them into Allplan.

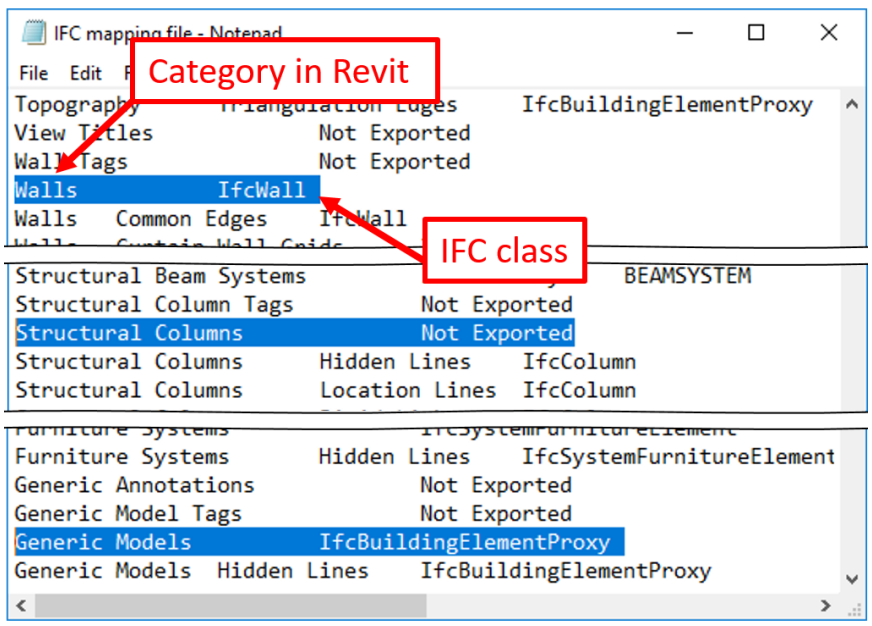

Figure 2.4 Revit-IFC Mapping File

Figure 2.4 shows an example of the IFC Mapping File corresponding to the settings shown in Figure 2.3. The file is basically a properly formatted text file. Each line contains a category in Revit which is separated by a tab space from the corresponding IFC class.

IfcExportAs Attribute

The analyzed Revit model contains many instances of category “Generic Models” which by default are mapped to the “IfcBuildingElementProxy” class according to the default IFC mapping file. The user can overwrite this setting by assigning a shared parameter “IfcExportAs” to a Revit family. This way, the user can customize how instances of the same family, type or even individual instances are exported to an IFC file.

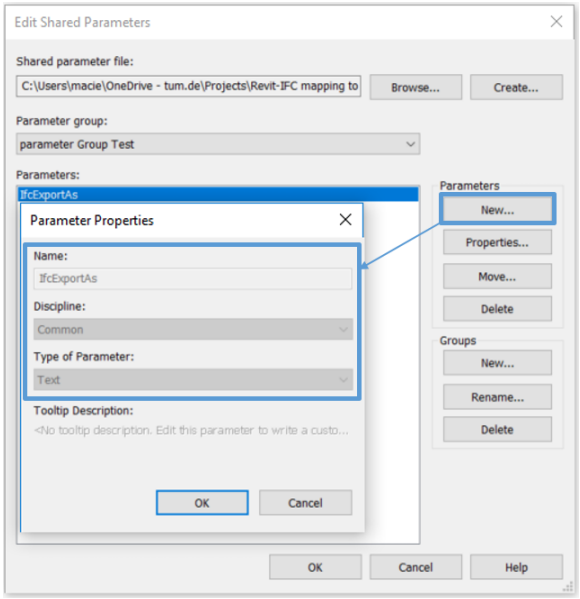

Figure 2.5 Revit: Creation of the IfcExportAs shared parameter. The figure based on [1]

This is achieved by creating a shared parameter named “IfcExportAs” of type “Text” (as shown in Figure 2.5). Next, the parameter is assigned to a family. There are a few ways to do so. As shown in Figure 2.6, the parameter is assigned to a loadable family in the family editor. The user selects the “IfcExportAs” parameter from the list of shared parameters (marked with “1” and “2”) and then groups the parameter under the “IFC Parameters” (marked with “3”). Finally, the user decides if the value of the parameter is shared across its type or is individual to each instance of the type (marked with “4”). The result can be seen in Figure 2.7, where “IfcWall” has been assigned.

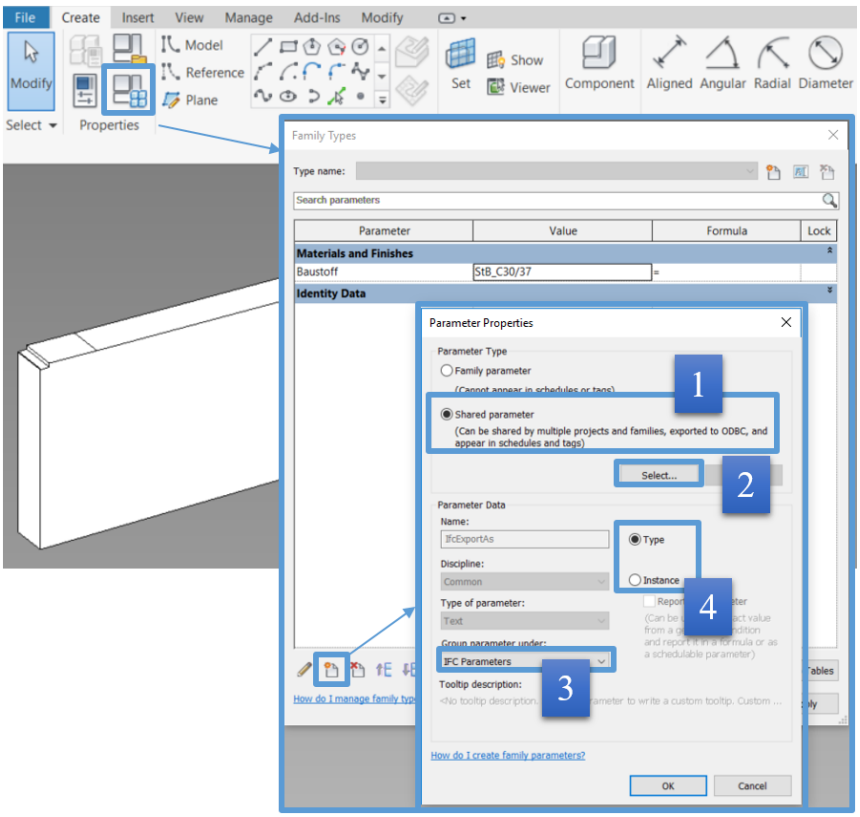

Figure 2.6 Revit: Assignment of a shared parameter to a family. The figure based on [1]

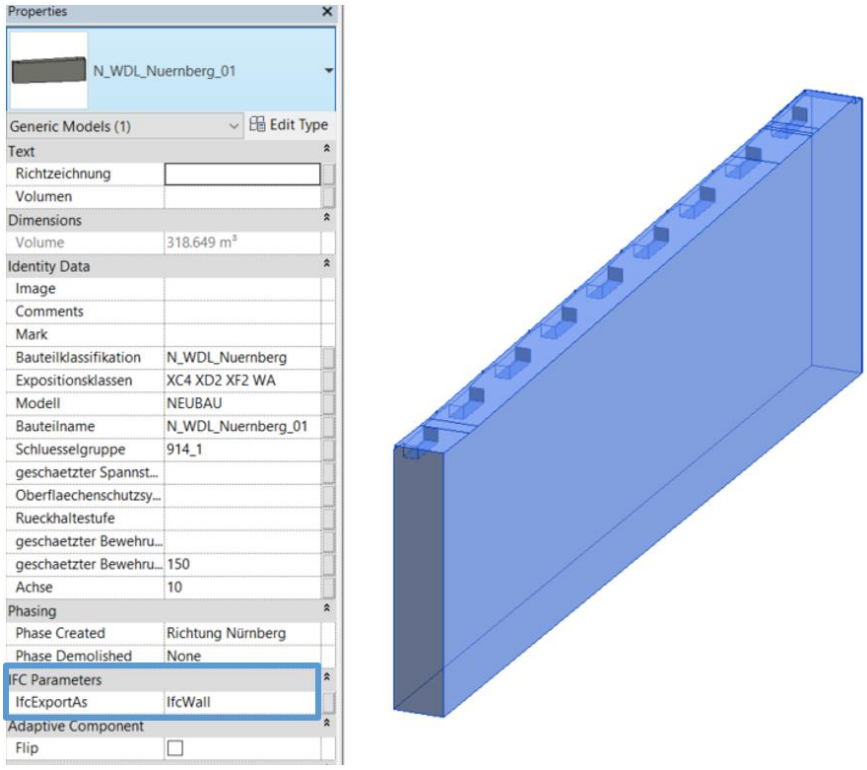

Figure 2.7 Revit: IfcExportAs parameter assigned to an instance of category “Generic Models”

2.1.2 Import Options in Allplan

Allplan offers the certified import of IFC files based on the 2x3 schema using the “Import IFC data” interface as shown in Figure 2.8. There are multiple options to select (shown on the right side) especially when it comes to which component types should be imported into Allplan. However, as it is the case in Revit, the user has no influence on the type of geometric representation of the imported entities.

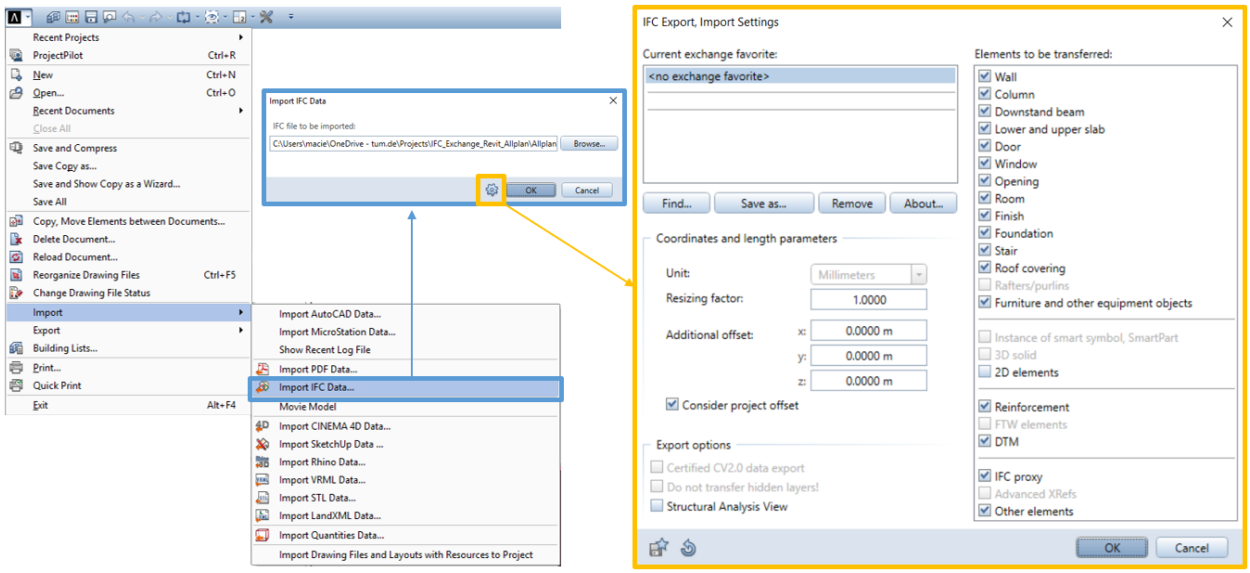

Figure 2.8 Allplan: IFC import settings

The mapping of IFC classes to Allplan types is not explicitly available to the user and is presented in Table 2.1.

Element	Comment	IFC Object
Wall	Straight wall	- IfcWallStandardCase:
Wall	Special walls like curved walls, entity-based walls, spline-based walls, freeform walls	- IfcWall:
Column		- IfcColumn:
Downstand beam		- IfcBeam:
Lower slab and upper slab		- IfcSlab:
Door		- IfcDoor:
Window		- IfcWindow:
Opening	Window openings, door openings, slab openings, niches, recesses and joints	- IfcOpening:
Room		- IfcSpace:
Finish	Finishing surfaces from rooms, vertical surfaces, ceilings and floors	- IfcCovering:
Foundation		- IfcFooting:
Stair		- IfcStair:
Roof covering		- IfcRoof:
Furniture and other Equipment		- IfcFurnitureElement:
2D elements		- IfcAnnotation:
Reinforcement	Bar reinforcement Mesh Reinforcement	- IfcReinforcingBar: - IfcReinforcingMesh:
DTM		- IfcSite:
IfcProxy	For smart symbol elements, 3D solids and DTM elements (digital terrain model)	- IfcBuildingElementProxy:
Other elements		- IfcBuildingElementProxy:

Table 2.1 IFC-Allplan mapping matrix [5]

2.1.3 Modifiability Cases

This section deals with modifiability cases, which means that there are described ways of how elements imported from an IFC file can be geometrically modified in the respective BIM design applications (what is their "behavior" when the user tries to geometrically modify the elements).

The desired is that all imported elements can be geometrically modified in a similar way to how they are modified in the BIM design application from which they have been exported. For example, a boring pile should be imported as a cylinder whose length and diameter is directly modifiable. For the wing walls, it should be possible to change the thickness and the position of the corner points. It should be possible to add voids to these elements.

In order to achieve the desired modifiability in the receiving application (in this case Allplan), the class representing the geometry of an entity in an IFC file should be correct and, as section 2.3 reveals, the component type of the entity should be consistent with certain predefined settings in Allplan. For example, the class representing the geometry of a pile in an IFC file should be "IfcExtrudedAreaSolid". This means that the geometry of the pile is explicitly defined by a cross-section which is then extruded in a desired direction and for a specific length. Moreover, to achieve the desired modifiability in Allplan, the component type of the pile should be "IfcColumn" (surprisingly, if the component type of the pile is "IfcPile", it is geometrically unmodifiable in Allplan). The desired case of modifiability for imported piles can be seen in Figure 2.9. After importing them into Allplan, they are modifiable via a dialog box, where the user can easily change their diameter and length (as for predefined Allplan columns).

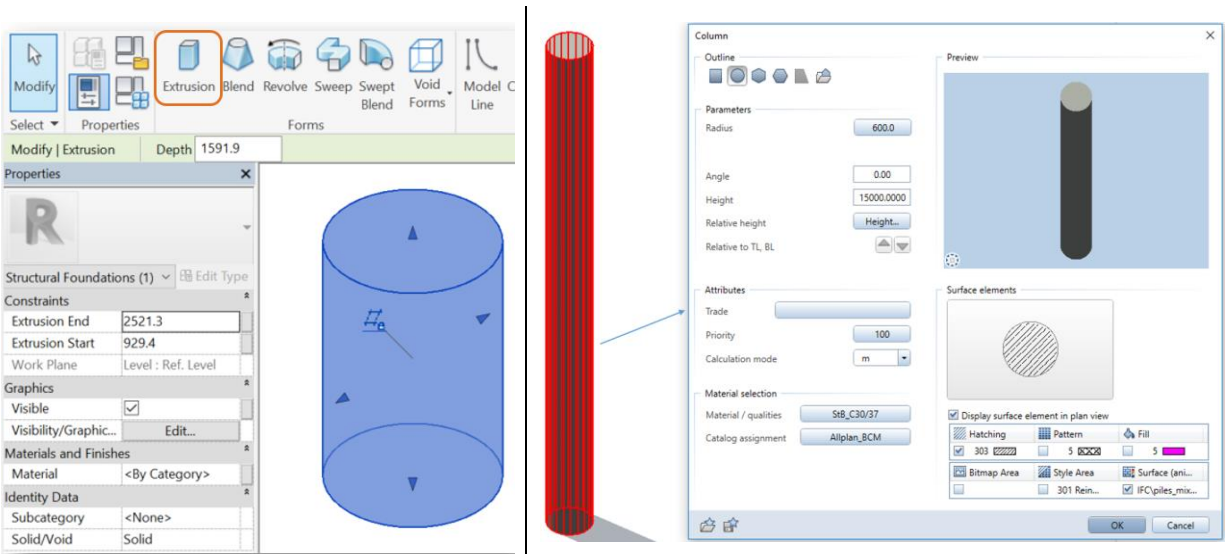

Figure 2.9 The desired case of modifiability for a pile exported from Revit (on the left) and imported into Allplan (on the right)

Another example of the desired case of modifiability can be seen in Figure 2.10. The wall has been modeled in Revit using the predefined Revit type for walls, exported to an IFC file as "IfcExtrudedAreaSolid" (geometry) and "IfcWallStandardCase" (component type), and imported into Allplan as element of type "Wall" which is geometrically modifiable in the same way as the native elements of the predefined Allplan type "Wall".

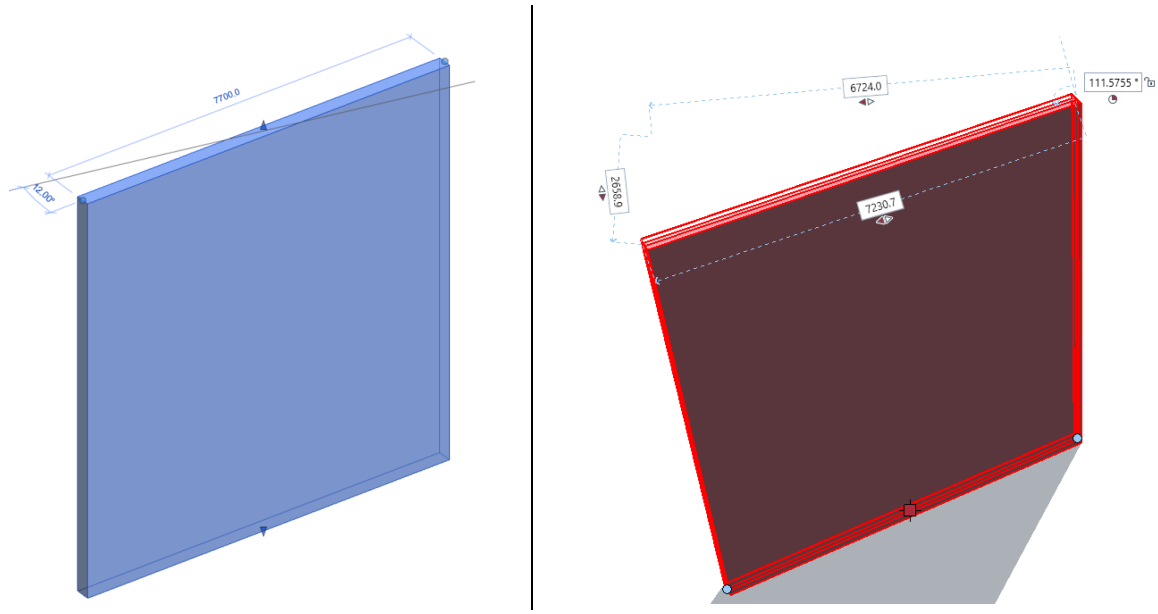

Figure 2.10 The desired case of modifiability for a wall exported from Revit (on the left) and imported into Allplan (on the right)

However, except for piles (which are simple extrusions in terms of geometry), elements analyzed in the case study require more complex geometry than simple extrusions and were modeled without using the predefined Revit types (as described in section 2.3). Accordingly, their geometry is often translated into an implicit form of geometry called Boundary Representation (Brep) in an IFC file. While translating into Brep, faces can be tessellated and therefore they are hard to modify in the receiving application. Figure 2.11 shows Breps which are modifiable by control points in Allplan. The wing wall on the left side has not been tessellated and therefore is easily modifiable. However, the pile on the right side has been tessellated during the translation, and after importing it into Allplan, the pile is extremely hard to modify. The geometries of both piles and wing walls are represented in the IFC file by class “IfcFacetedBrep”.

Finally, there is one more case of modifiability – unmodifiable. This means that irrespectively of type of geometric representation, the element stays unmodifiable

In the case study, based on the elements imported from the IFC bridge model, the following cases of geometric modifiability in Allplan can be distinguished:

1. Modifiable by dialog box (as shown in Figure 2.9 on the right side)
2. Modifiable by control points (as shown in Figure 2.11)
3. Unmodifiable (dump objects) (as shown in Figure 2.12)

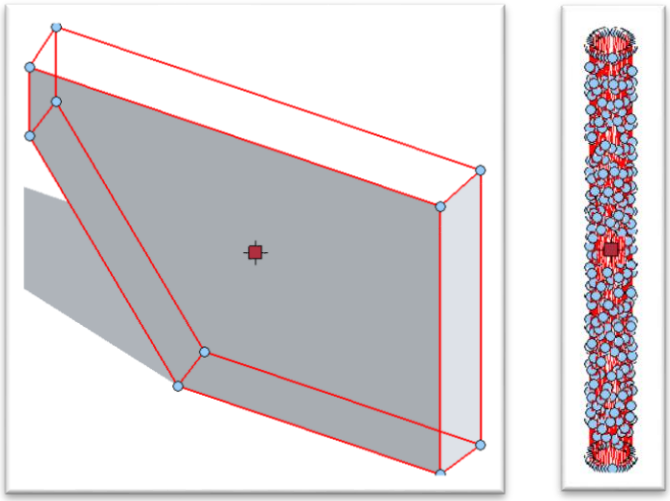

Figure 2.11 Imported wing wall and a tessellated column modifiable by control points – the tessellated column represents the undesired case

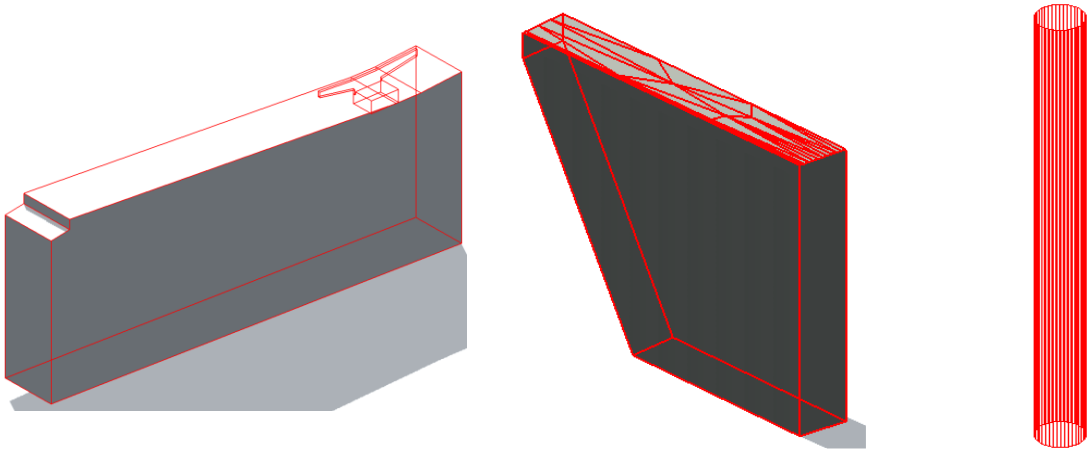

Figure 2.12 Imported unmodifiable elements (dump objects) – undesired cases

2.2 How the analysis has been carried out

This section outlines the analysis of the provided models. The outcome of the holistic analysis is presented in section 2.3.

2.2.1 Analyzed Elements

Based on the provided model, the following Revit elements have been analyzed (Figure 2.13):

1. Piles
2. Abutments
3. Wing walls
4. Beams

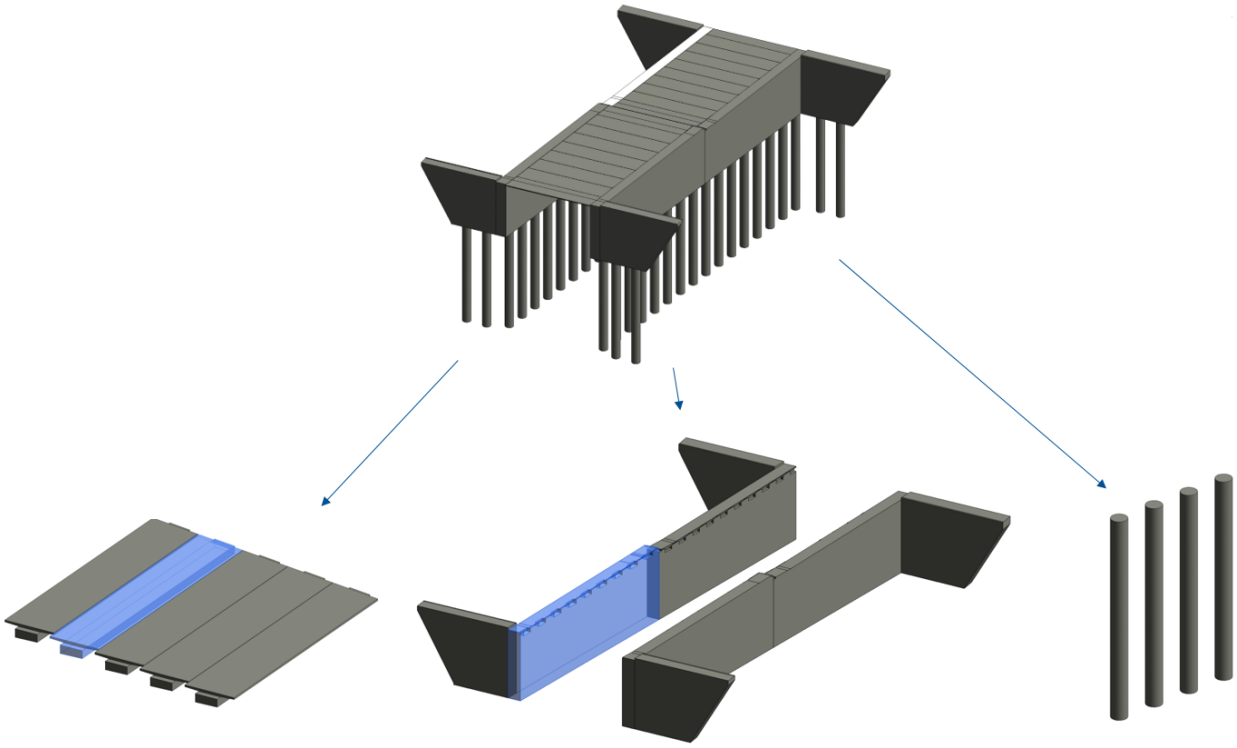

Figure 2.13 Elements analyzed in the report

2.2.2 Export Configuration

As shown in Figure 2.14, individual instances have been assigned with different IFC classes using the IfcExportAs attribute.

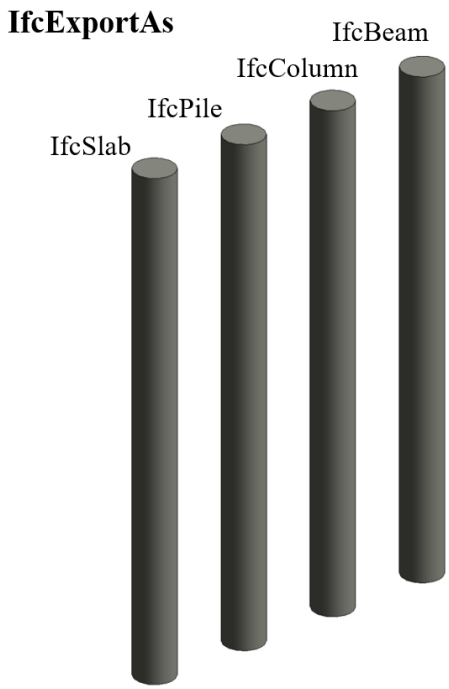

Figure 2.14 Different IFC classes assigned to individual instances

Next, the elements have been exported to an IFC file using the following settings (described in section 2.1):

- IFC 2x3 Coordination View 2.0
- mixed “Solid Model” representation (turned on and off)
- low level of details

In the exported IFC file, the class representing the geometry of elements has been checked as shown in Figure 2.15.

```
#262= IFCCIRCLEPROFILEDEF(.AREA.,'N_GRU_Nuernberg',#261,0.6);
#263= IFCCARTESIANPOINT((-18.8449034942453,72.115631793089,-15.));
#265= IFCAXIS2PLACEMENT3D(#263,$,$);
#266= IFCEXTRUDEDAREASOLID(#262,#265,#19,15.);
#267= IFCSTYLEDITEM(#266,(#221),$);
#270= IFCSHAPEREPRESENTATION(#101,'Body','SweptSolid',(#266));
#272= IFCPRODUCTDEFINITIONSHAPE($,$,(#270));
#274= IFCPILE('2zn7c6uALF5fZxlB2QNggK',#41,'N_GRU_Nuernberg:N_GRU_Nuer
```

Figure 2.15 A class representing the geometry in an IFC file

Next, the exported IFC file has been loaded into a Solibri Model Viewer in order to check what value was assigned to the geometry property (Figure 2.16).

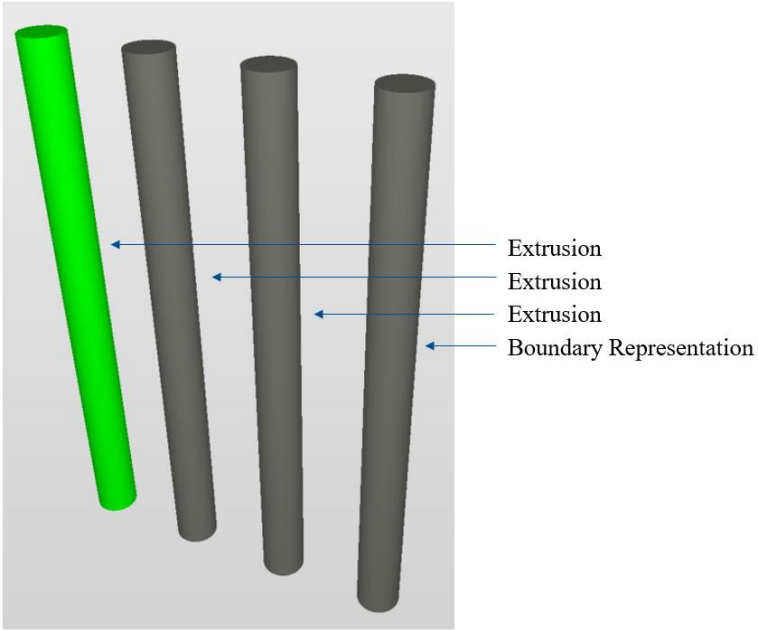

Figure 2.16 Solibri Model Checker: example of values assigned to the respective elements

Finally, the IFC file has been loaded into Allplan. The elements have been checked against the recognized component types and their modifiability as shown in Figure 2.17.

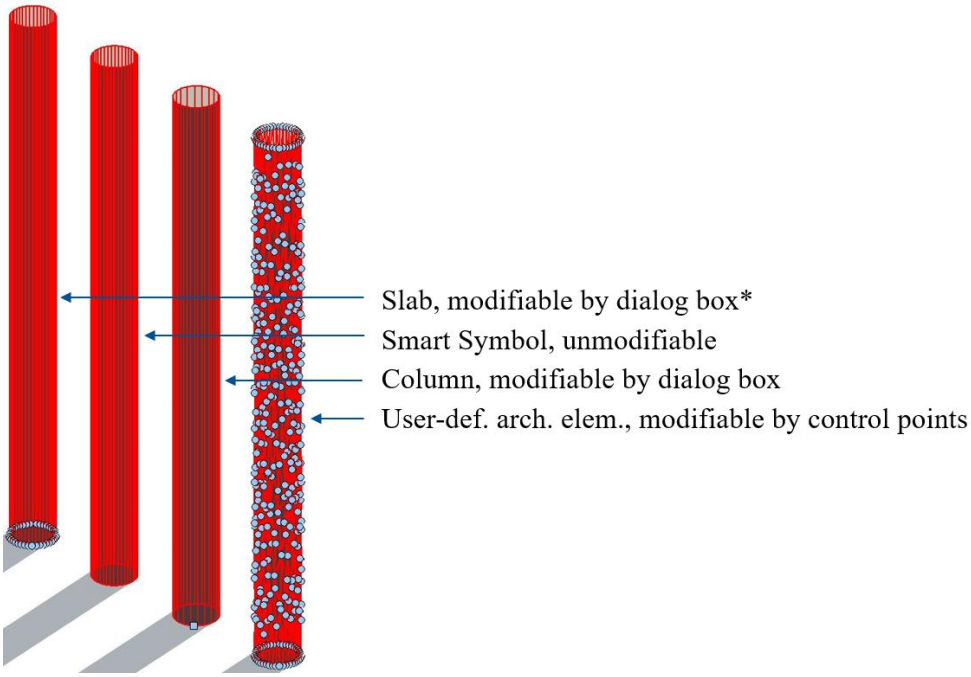

Figure 2.17 Allplan: example of modifiability cases for the respective elements

2.2.3 Import Configuration

Since none of the IFC import options in Allplan refers to geometric representation of entities, the default settings seen in Figure 2.8 have been applied while importing the IFC files into Allplan.

2.3 Results

This section is divided into 4 parts (each for one type of the analyzed elements) and contains results obtained in the case study.

2.3.1 Piles

The piles have been modeled as an extrusion in a loadable family (.rfa file) and then instantiated in the model (Figure 4.1). Their category is Structural Foundations.

Loadable Family Editor	Family Instance in the model
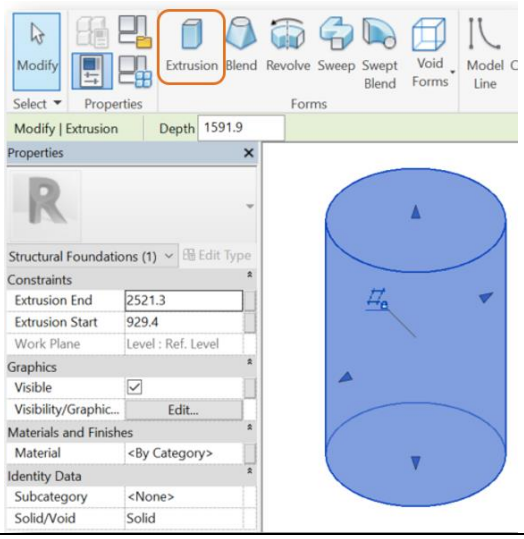	

Figure 2.18 Revit: A pile modeled as extrusion

The outcome of the exchange of such created elements can be seen in Table 2.2.

No	Revit		IFC file	Solibri	Allplan		
-	Geometry	IfcExportAs	Geometry Class	Geometry	Component Type	Modifiability Case	Geometry Remarks
1	Fig. 2.18	IfcBuilding ElementProxy	IFCEXTRUDEDAREASOLID	Extrusion	Smart Symbol	unmodifiable	-
2		IfcSlab	IFCEXTRUDEDAREASOLID	Extrusion	Slab	by dialog box*	-
3		IfcPile	IFCEXTRUDEDAREASOLID	Extrusion	Smart Symbol	unmodifiable	-
4		IfcColumn	IFCEXTRUDEDAREASOLID	Extrusion	Column	by dialog box	-
5		IfcBeam	IFCFACETEDBREP	Brep	User-def. arch. elem.	by control points	triangulated

Table 2.2 Result of geometry exchange for the piles

As Table 2.2 demonstrates, piles exported as IfcBuildingElementProxy are recognized in Allplan as an instance of Smart Symbol and are unmodifiable[3]. Surprisingly, the same outcome can be seen for piles exported as IfcPile. The best result can be achieved when piles are exported as IfcColumn because they are modifiable via a dialog box. This gives the user a similar experience as for working with the pre-defined Allplan columns.

[3] the modifiability of the pile can be changed after an additional operation executed by the user. However, directly after the import, the pile remains unmodifiable.

2.3.2 Abutments

Abutments have been modeled in two ways. The first one can be seen in Figure 2.19, where the element's loadable family has been modeled precisely in a family creator as a free form element (however, there is no free-form surfaces modeled. The family simply uses the free-form module provided by Revit but without utilizing the free-form surfaces themselves). Next, the family instance has been instantiated in the model.

Loadable Family Creator	Family Instance in the model
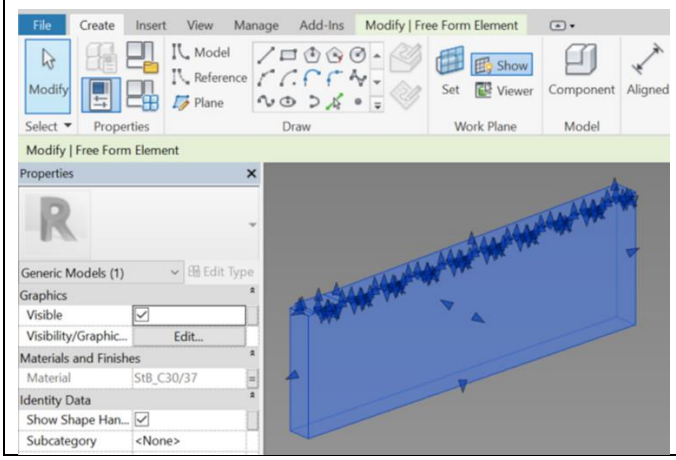	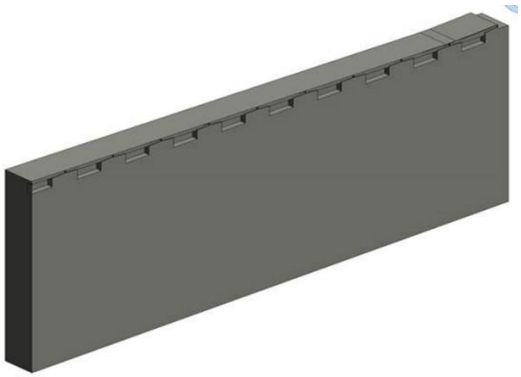

Figure 2.19 Revit: Modeling of the abutment – the 1st way

The other way of modeling the abutments is presented in Figure 2.20. The final geometry is a combination of modeling in the loadable family editor and the Boolean difference operations made on the instance of the abutment and auxiliary mass objects in the model. Both ways imply some level of automation (presumably using Dynamo). In addition, both ways of modeling presented in Figure 2.19 and Figure 2.20 give the same outcome presented in Table 2.3.

Loadable Family Creator	Family Instance in the model
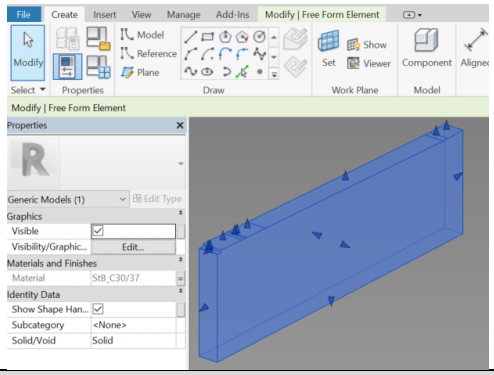	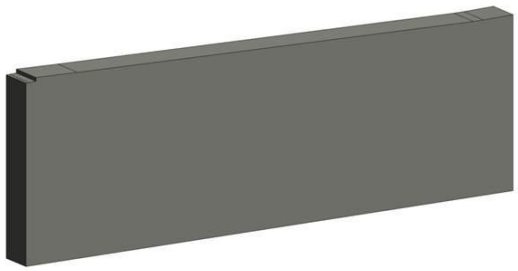
Boolean differences between the Family Instance and mass objects in the model	**Final geometry**
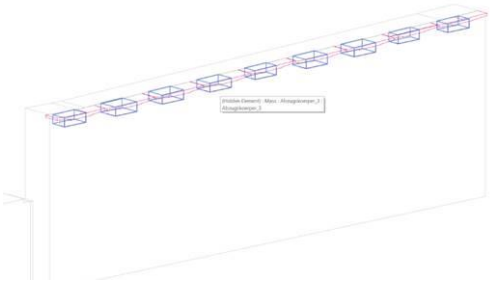	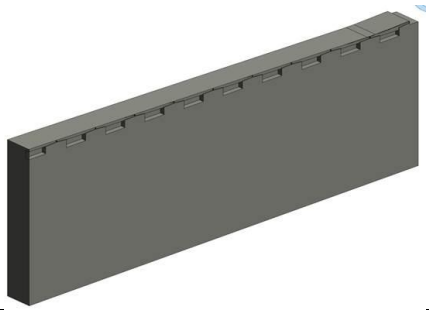

Figure 2.20 Revit: Modeling of the abutment – the 2nd way

No	Revit		IFC file	Solibri	Allplan		
-	Geometry	IfcExportAs	Geometry Class	Geometry	Component Type	Modifiability Case	Geometry Remarks
1	Fig. 2.19 / Fig. 2.20	IfcBuilding ElementProxy	IFCFACETEDBREP	Brep	Smart Symbol	unmodifiable	some faces triangulated
2		IfcWall	IFCFACETEDBREP	Brep	user-def. arch.elem.	by control points	some faces triangulated
3		IfcColumn	IFCFACETEDBREP	Brep	user-def. arch.elem.	by control points	some faces triangulated

Table 2.3 Result of geometry exchange for the abutments

2.3.3 Wing Walls

The wing walls have been modeled in the same way as the abutments (section 2.3.2). The final geometry is a combination of modeling in the loadable family editor and the Boolean difference operations made on the instance of the wing wall and auxiliary mass objects in the model. The process is shown in Figure 2.21.

Loadable Family Creator	Family Instance in the model
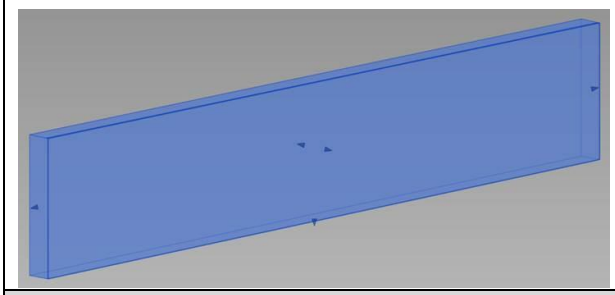	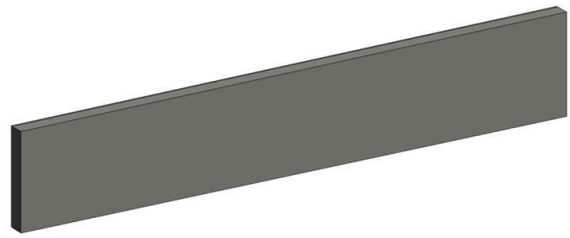
Boolean differences between the Family Instance and mass objects in the model	**Final geometry**
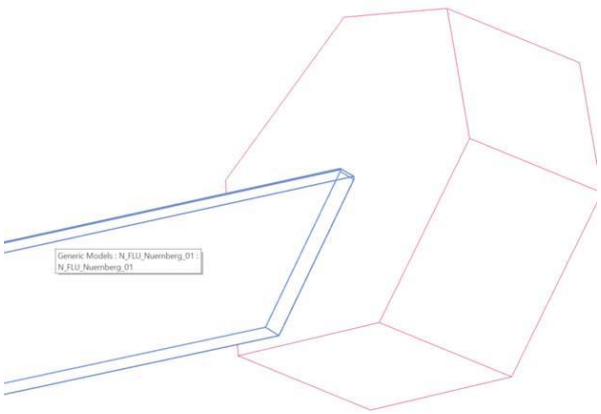	

Figure 2.21 Revit: Modeling of the wing walls

Table 2.4 shows the result of the exchange of the wing walls which is the same as for the abutments in section 2.3.2.

No	Revit		IFC file	Solibri	Allplan		
-	Geometry	IfcExportAs	Geometry Class	Geometry	Component Type	Modifiability Case	Geometry Remarks
1	Fig. 2.21	IfcBuilding ElementProxy	IFCFACETEDBREP	Brep	Smart Symbol	unmodifiable	one face triangulated
2		IfcWall	IFCFACETEDBREP	Brep	user-def. arch.elem.	by control points	one face triangulated
3		IfcColumn	IFCFACETEDBREP	Brep	user-def. arch.elem.	by control points	one face triangulated

Table 2.4 Result of geometry exchange for the wing walls

2.3.4 Beams

Figure 2.22 shows how the beams have been modeled. Their geometry is a combination of an extrusion (the grey parts on the left) and a sweep (the blue part on the left) in a loadable family (Generic Models). Next, the objects have been instantiated in the model (as shown on the right).

Loadable Family Editor	Family Instance in the model
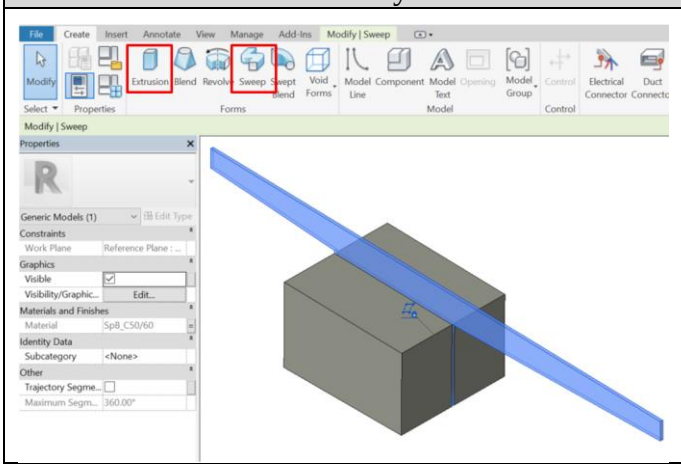	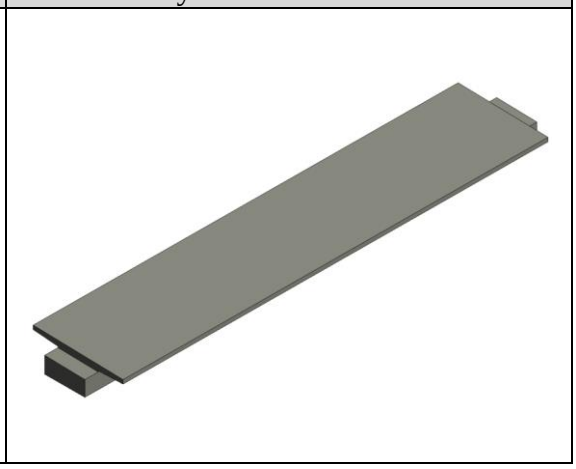

Figure 2.22 Revit: Modeling of the beams

The outcome of the exchange of the beams can be seen in Table 2.5. As it is the case for any instance of category Generic Models mapped to IfcBuildingElementProxy, the beams are recognized as instances of smart symbol in Allplan and stay unmodifiable. The same outcome can be seen for beams exported as IfcSlab. In all other cases (especially for IfcBeam) the beams are modifiable by control points, however a face is triangulated.

No	Revit		IFC file	Solibri	Allplan		
-	Geometry	IfcExportAs	Geometry Class	Geometry	Component Type	Modifiability Case	Geometry Remarks
1	Fig. 2.22	IfcBuilding ElementProxy	IFCFACETEDBREP	Brep	Smart Symbol	unmodifiable	one face triangulated
2		IfcBeam	IFCFACETEDBREP	Brep	user-def. arch. elem.	by control points	one face triangulated
3		IfcSlab	IFCFACETEDBREP	Brep	Smart Symbol	unmodifiable	one face triangulated
4		IfcColumn	IFCFACETEDBREP	Brep	user-def. arch. elem.	by control points	one face triangulated
5		IfcWall	IFCFACETEDBREP	Brep	user-def. arch. elem.	by control points	one face triangulated

Table 2.5 Result of geometry exchange for the beams

3 Allplan-IFC-Revit Exchange

It might also happen that the conceptual design is developed using Allplan. Revit, in turn, is used for the detailed design. Therefore, chapter 3 explores the exchange between Allplan and Revit (the order matters) using IFC, based on the bridge model provided by one of professional engineering consultancies.

3.1 Basics

3.1.1 Export Options in Allplan

The Export options described in this section focus on the geometry of elements.

3.1.1.1 IFC Export Settings

Currently, Allplan allows to export its project model to an IFC file using 2 interfaces - the first one “Export IFC Data” and the other “Export IFC 2x3 Data” as it can be seen in Figure 3.1.

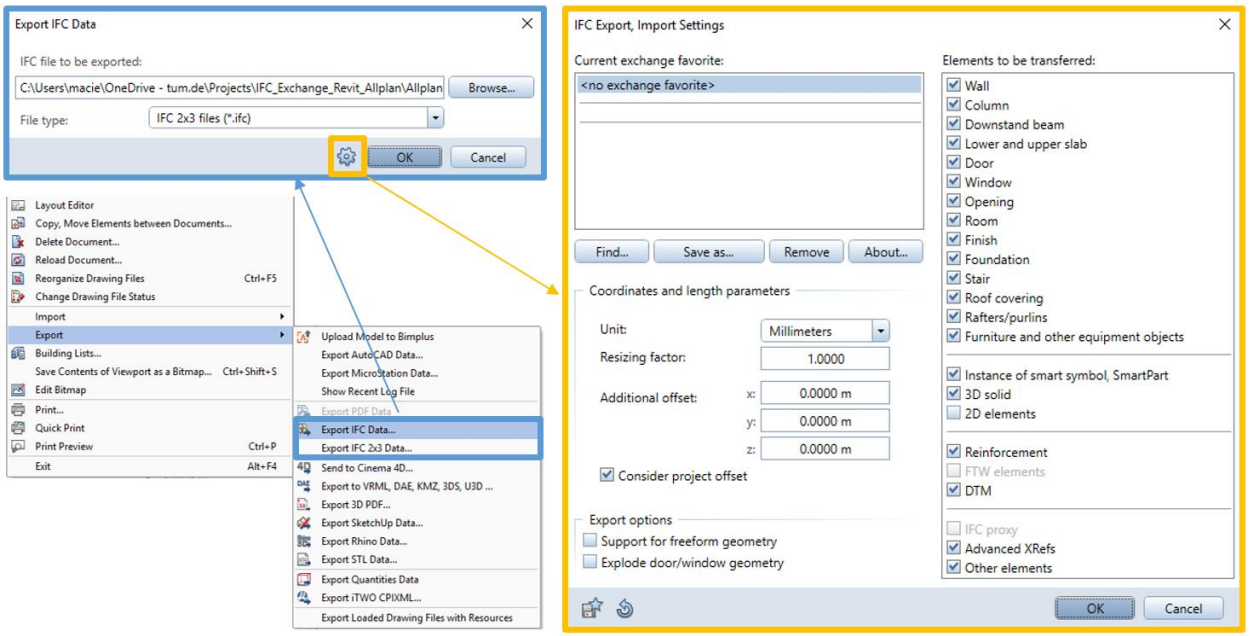

Figure 3.1 Allplan-IFC export options

The difference between these two IFC export interfaces are outlined in Figure 3.3. The major difference is that “Export IFC 2x3 Data” interface provides the certified Coordination View 2.0, whereas the “Export IFC Data” gives the possibility to export data compliant with the IFC 4 version. However, the newer interface has not been certified yet. In addition, the newer interface supports freeform geometry.

The next thing worth mention is that the export to IFC 4 is of unknown view. The user cannot select between “IFC 4 Design Transfer View” and “IFC 4 Reference View”. This fact can be seen in Figure 3.2 where the exported IFC file is not described with any view. Therefore, the desired design-to-design exchange using the “Design Transfer View” cannot be tested.

```
1  ISO-10303-21;
2  HEADER;FILE_DESCRIPTION(('no view'),'2;1');
3  FILE_NAME(
4  'C:\\Users\\macie\\OneDrive - tum.de\\Projects\\I
5  ,
6  '2018-01-18T18:44:45',('Maciej Trzeciak'),('Nemet
7  'Konrad-Zuse-Platz 1, 81829 Munich / Germany'),
8  'EDMsix Version 2.0100.09 Sep  7 2016',
9  'Allplan 2018.0 08.12.2017 - 11:01:58','');
10 FILE_SCHEMA(('IFC4'));
11 ENDSEC;
12
13 DATA;
14 #1= IFCSIUNIT(*,.LENGTHUNIT.,$,.METRE.);
15 #2= IFCSIUNIT(*,.LENGTHUNIT.,.MILLI.,.METRE.);
```

Figure 3.2 IFC file without declared model view

	Export IFC Data	Export IFC 2x3 Data
File formats	IFC 4, IFC XML 4, IFC 2X3, IFC XML 2x3	IFC 2X3, IFC XML 2x3
Export options area		
Certified CV2.0 data export	No	Yes
Do not transfer hidden layers	No	Yes
Structural Analysis View	No	Yes
Support freeform geometry	Yes	No
Explode door/window geometry	Yes	No
Elements to be transferred area		
Reinforcement (reinforcing bars and meshes)	Yes	Yes
FTW elements	No	Yes
DTM	Yes	Yes
From **Allplan**		
Analysis of the **IFC ObjectType** attribute	Yes	Yes
Analysis of the **IFC ObjectSubtype** attribute	Yes	No
Calculation of BaseQuantities	No	Yes

Figure 3.3 Allplan: Differences between two IFC interfaces [5]

3.1.1.2 Allplan-IFC mapping

The report has checked if assigning different component types to elements of the same geometry has any influence on its geometric modifiability after its import into Revit (as it is the case in the first part of the report – section 1). Therefore, below, the reader can find the ways of assigning different component types to elements in Allplan. However, as the results in section 3.3 show, geometric modifiability in the receiving application does not change for different component types.

Mapping Matrix

By default, the mapping of Allplan instances to IFC classes is governed by the mapping matrix shown in Figure 3.4. The mapping works in the same way as described in section 2.1.1.1. For example, Allplan elements of type “Column” are mapped to IFC class “IfcColumn”. Other

elements (i.e. these of none of the pre-defined Allplan types) are, by default, mapped to objects of class “IfcBuildingElementProxy”.

Element	Comment	IFC Object
Wall	Straight wall	- IfcWallStandardCase:
Wall	Special walls like curved walls, entity-based walls, spline-based walls, freeform walls	- IfcWall:
Column		- IfcColumn:
Downstand beam		- IfcBeam:
Lower slab and upper slab		- IfcSlab:
Door		- IfcDoor:
Window		- IfcWindow:
Opening	Window openings, door openings, slab openings, niches, recesses and joints	- IfcOpening:
Room		- IfcSpace:
Finish	Finishing surfaces from rooms, vertical surfaces, ceilings and floors	- IfcCovering:
Foundation		- IfcFooting:
Stair		- IfcStair:
Roof covering		- IfcRoof:
Rafters, purlins	Rafter, purlin and beam structures	- IfcBeam:
Furniture and other Equipment		- IfcFurnitureElement:
Instance of smart symbol, SmartPart		- IfcBuildingElementProxy:
3D objects		- IfcBuildingElementProxy:
2D elements		- IfcAnnotation:
Reinforcement	Bar reinforcement Mesh reinforcement	- IfcReinforcingBar: - IfcReinforcingMesh:
FTW elements	*Not transferred*	
DTM		- IfcSite:
IfcProxy	For smart symbols and 3D objects	- IfcBuildingElementProxy:
Advanced XRefs	For transferring elements embedded in **Advanced XRefs**.	In accordance with the appropriate Allplan element type
Other elements		- IfcBuildingElementProxy:

Figure 3.4 Allplan-IFC mapping matrix [5]

IFC Object Type attribute

The user can overwrite the mapping settings described in the previous paragraph by assigning the IFC Object Type attribute to a specific element. To do so, the user modifies an element by the “Modify Attributes” dialog box as shown in Figure 3.5. Then, from a predefined list of attributes, the user selects “IFC” and “IFC Object Type”. Next, the desired IFC class is chosen from the pre-defined list. The geometric representation of such elements exported to an IFC file is always Brep (Allplan version 2018-0-2), which means that the native Allplan wall of IFC Object Type “IfcWall” will be exported as Brep and not as extrusion.

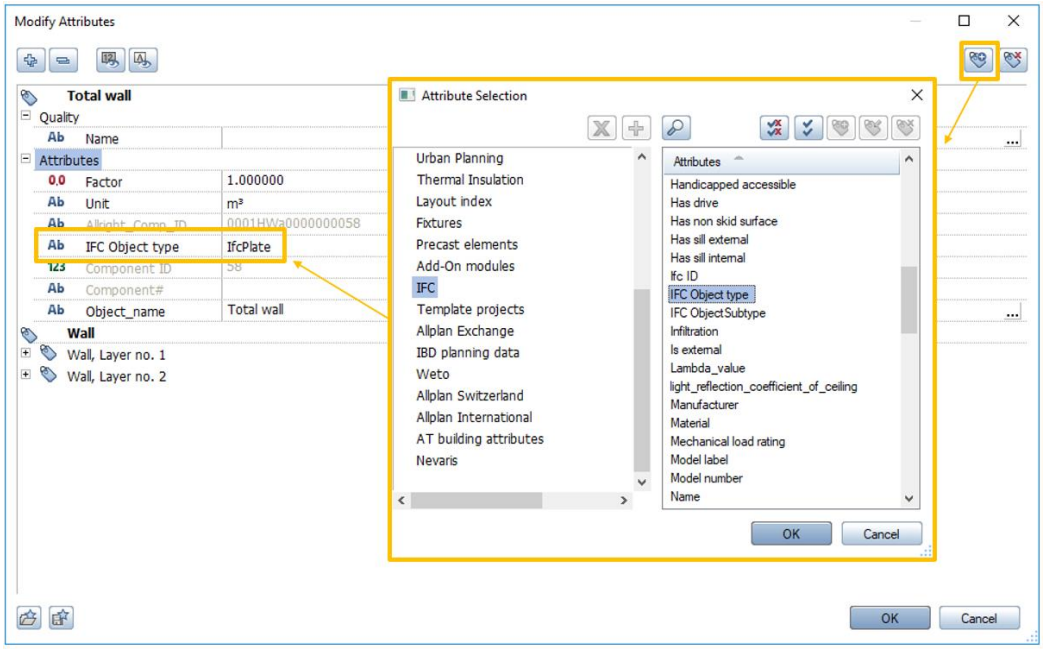

Figure 3.5 Allplan: Assignment of the “IFC Object Type” attribute to an element

3.1.2 Import Options in Revit

Revit supports importing the following IFC versions: IFC4, IFC2x3, and the older versions (not used in the report). IFC files can be imported into Revit using the appropriate IFC interface as shown in Figure 3.6 on the left. Besides, Revit offers a mapping file which basically maps IFC classes to Revit categories. In the example shown below, all IfcColumn objects are mapped to instances of category Columns.

In addition, Revit provides the “Link IFC” option, which is designed for the “reference” exchange scenario. This option is not under consideration in this report.

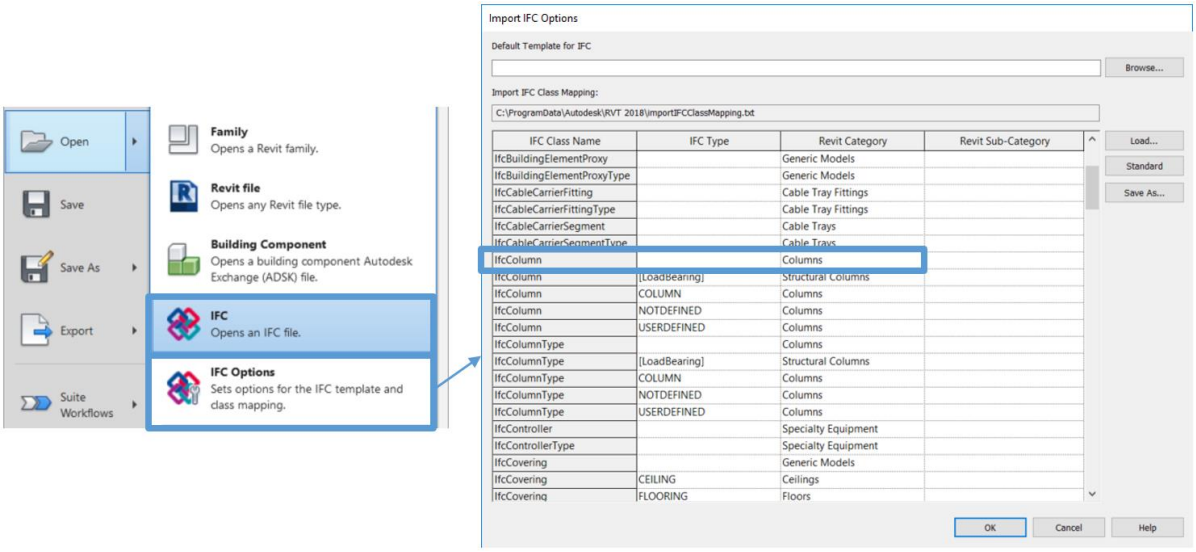

Figure 3.6 IFC-Revit import mapping settings

3.1.3 Modifiability Cases

Section 2.1.3 describes the desired modifiability cases. For the Allplan-Revit exchange, the same is expected. Therefore in this section, the modifiability cases which occur in this case study (in the Allplan-Revit exchange) are described so that the reader can properly understand the results described in the tables in section 3.3.

Based on the elements imported into Revit from the IFC bridge model, the following cases of geometric modifiability in Revit can be distinguished:

1. Modifiable by control points (as shown in Figure 3.7)
2. Unmodifiable (dump objects) (as shown in Figure 3.8)
3. Unmodifiable due to inability to maintain shape (as shown in Figure 3.9)

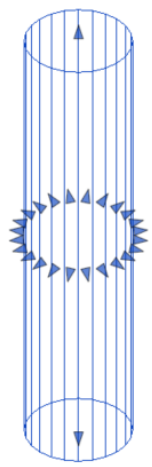

Figure 3.7 Revit: An imported pile modifiable by control points

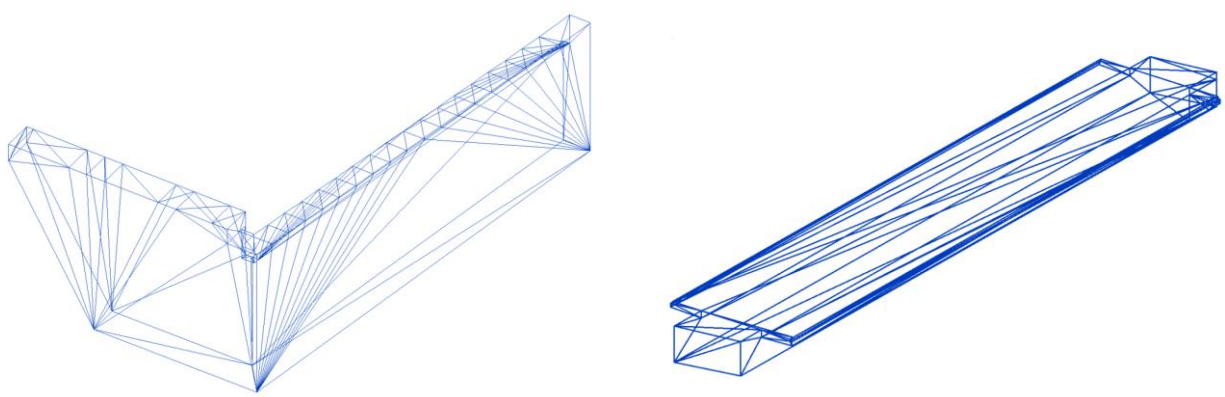

Figure 3.8 Revit: An imported wall and beam – unmodifiable

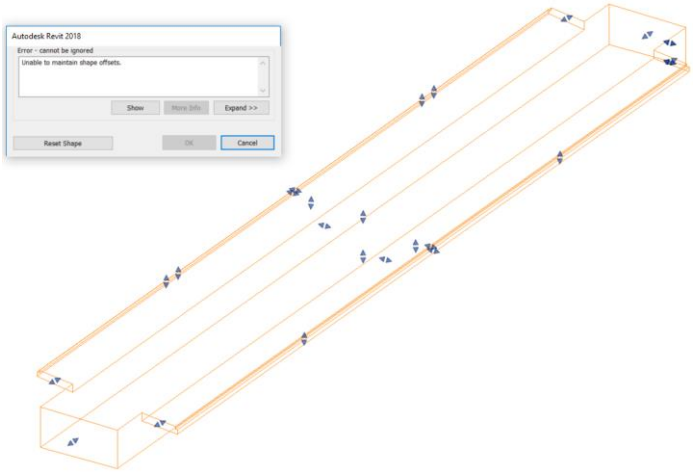

Figure 3.9 Revit: An imported beam – unmodifiable due to inability to maintain its shape while any attempt of geometric modification

3.2 How the analysis has been carried out

3.2.1 Analyzed Elements

Based on the provided model, the following elements have been analyzed (Figure 3.10):

1. Piles
2. Abutments and wing walls (as single elements)
3. Beams

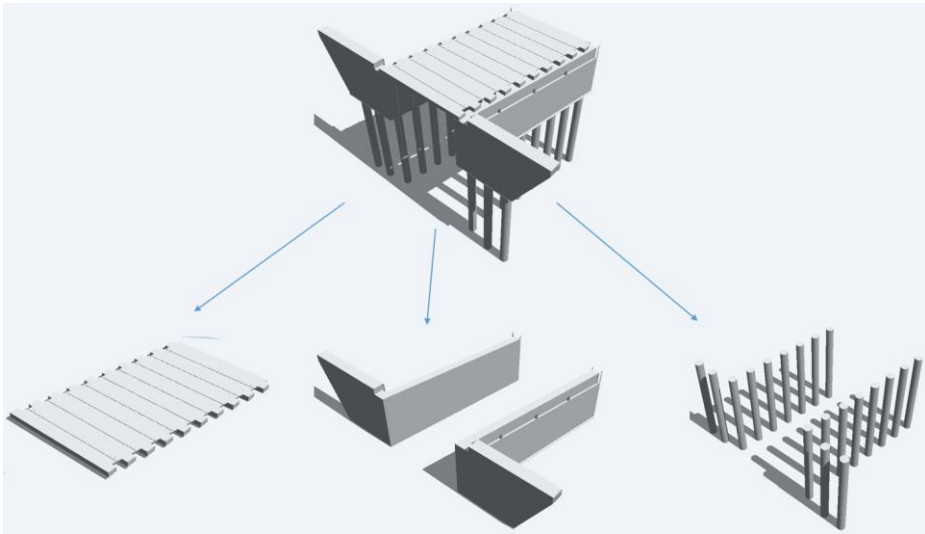

Figure 3.10 Allplan: Analyzed elements

3.2.2 Export Configuration

Individual instances have been assigned with different IFC classes using the “Ifc Object Type” attribute in Allplan. However, unlike in the Revit-IFC-Allplan analysis, assigning objects of the same geometry with different IFC classes, has proved to have no influence on the geometric modifications in Revit.

Next, the elements have been exported multiple times to IFC files using the following settings:

- the certified IFC 2x3 data export
- IFC 2x3 data (the newest interface)
- IFC 4.0 data (the newest interface)

As in section 2.2.2, the class representing the geometry of elements has been checked in each IFC file. Then, the IFC files have been loaded into the Solibri Model Viewer in order to check the value assigned to the geometry property. Finally, the IFC files have been opened in Revit and the respective elements have been checked against their geometric modifiability.

3.2.3 Import Configuration

Since none of the IFC import options in Revit refers to geometric representation of entities, the default mapping settings seen in Figure 3.6 have been applied while importing the IFC files into Revit.

3.3 Results

3.3.1 Piles

In Allplan, piles have been modeled as cylinders as it is shown in Figure 3.11.

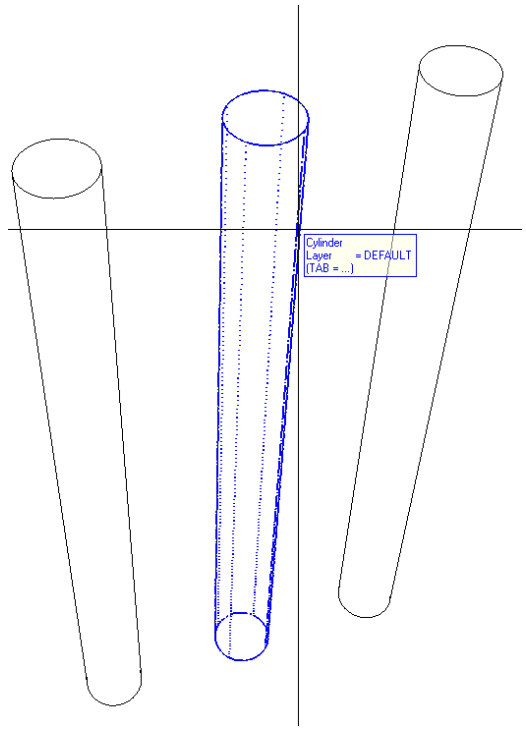

Figure 3.11 Allplan: Modeling of the piles as cylinders

Table 3.1 shows the result of their exchange. A pile exported as IfcColumn could not be found in Revit. A pile exported as IfcSlab has been recognized as belonging to category Floors while using the certified IFC 2x3 export interface, and to category Generic Models when using the most recent IFC export interface. Besides, in all cases the geometry has been modifiable by control points.

No	Allplan		IFC file	Solibri	Revit		
-	Geometry	IfcExportAs	Geometry Class	Geometry	Component Type	Modifiability Case	Geometry Remarks
1	Fig. 3.11	IfcBuildingElementProxy	IFCFACETEDBREP	Brep	Generic Models	by control points	-
2		IfcSlab	IFCFACETEDBREP	Brep	Floors / Generic Models	by control points	-
3		IfcPile	IFCFACETEDBREP	Brep	Structural Foundation	by control points	-
4		IfcColumn	IFCFACETEDBREP	Brep	object not found	-	-
5		IfcBeam	IFCFACETEDBREP	Brep	Structural Framing	by control points	-

Table 3.1 Result of geometry exchange for the piles

3.3.2 Abutments and Wing Walls

Figure 3.12 shows that the abutment and wing wall have been modeled as one element of type General 3D Object.

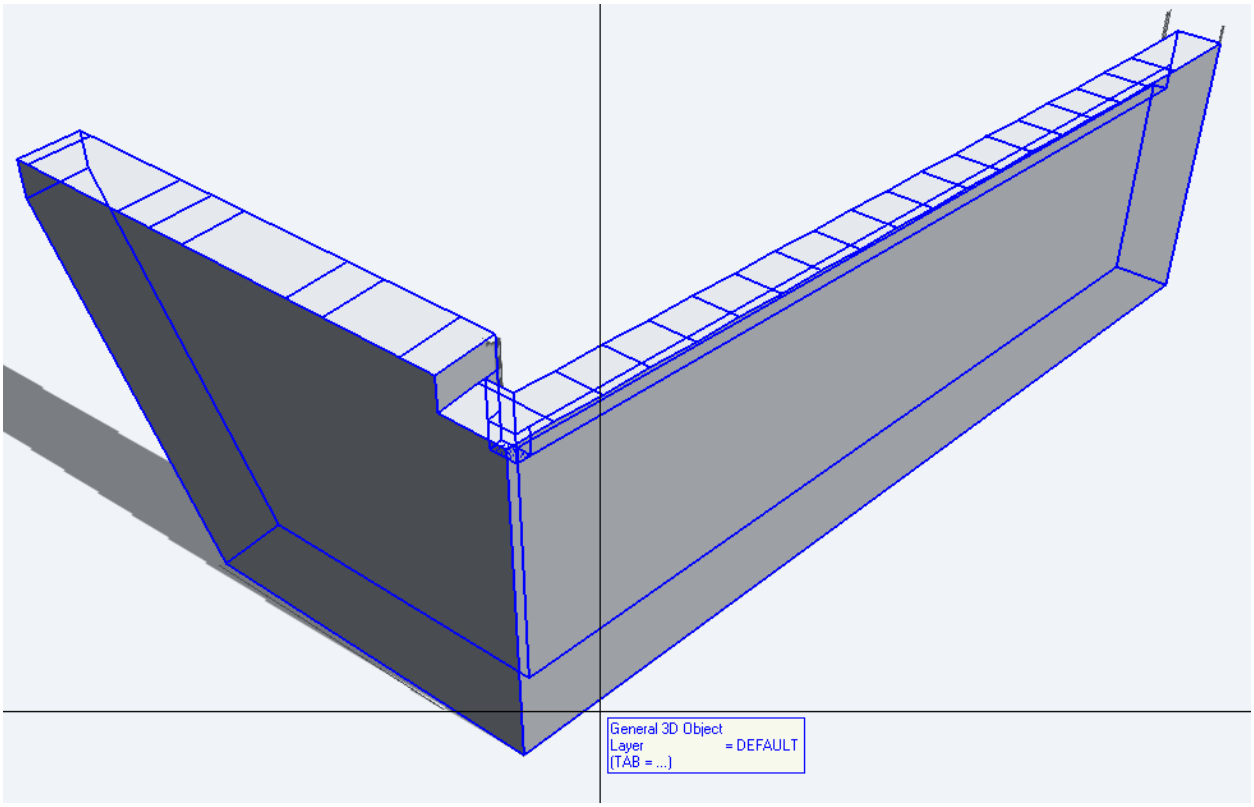

Figure 3.12 Allplan: Modeling of the abutment and wing wall as General 3D Object

The result of the exchange can be seen in Table 3.2. As it is the case for the piles and beams, the abutment could not be found in Revit when exported as IfcColumn. In other cases, the geometry was triangulated and unmodifiable.

No	Allplan		IFC file	Solibri	Revit		
-	Geometry	IfcObjectType	Geometry Class	Geometry	Component Type	Modifiability Case	Geometry Remarks
1	Fig. 3.12	IfcBuilding ElementProxy	IFCFACETEDBREP	Brep	Generic Models	unmodifiable	triangualted
2		IfcWall	IFCFACETEDBREP	Brep	Walls	unmodifiable	triangulated
3		IfcColumn	IFCFACETEDBREP	Brep	object not found	-	-

Table 3.2 Result of geometry exchange for the abutment and wing wall

3.3.3 Beams

The beams have been modeled as General 3D Objects as shown in Figure 3.13.

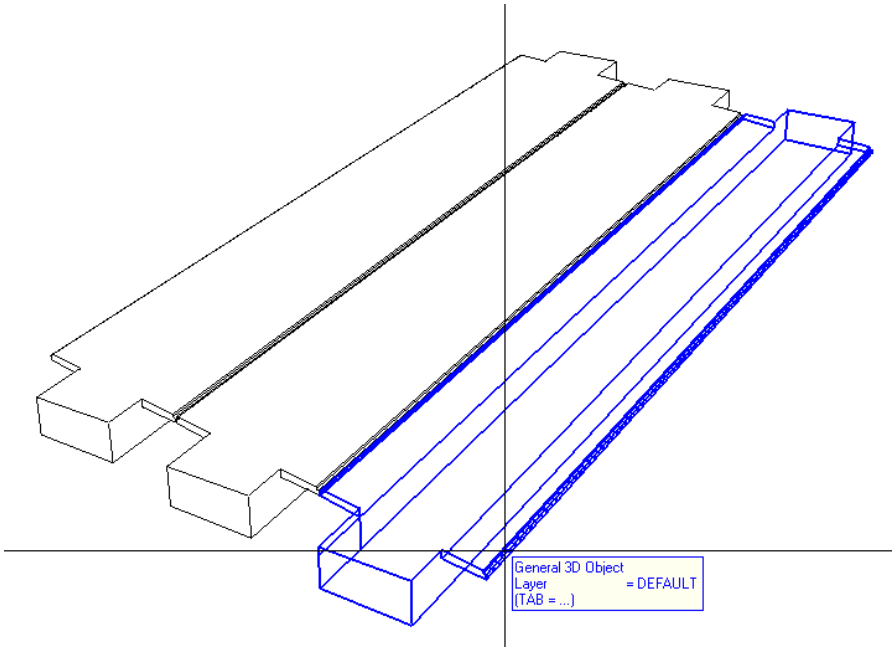

Figure 3.13 Allplan: Modeling of the beams as General 3D Object

Table 3.3 shows the result of the exchange. In each case, the geometry has been triangulated and unmodifiable. As it is the case for the piles and abutments, the beams exported as IfcColumn could not be found in Revit too.

No	Allplan		IFC file	Solibri	Revit		
-	Geometry	IfcExportAs	Geometry Class	Geometry	Component Type	Modifiability Case	Geometry Remarks
1	Fig. 3.13	IfcBuildingElementProxy	IFCFACETEDBREP	Brep	Generic Models	unmodifiable	triangulated
2		IfcBeam	IFCFACETEDBREP	Brep	Structural Framing	unmodifiable	triangulated
3		IfcSlab	IFCFACETEDBREP	Brep	Floors / Generic Models	unmodifiable	triangulated
4		IfcColumn	IFCFACETEDBREP	Brep	object not found	-	-
5		IfcWall	IFCFACETEDBREP	Brep	Walls	unmodifiable**	triangulated

Table 3.3 Result of geometry exchange for the beams

4 Summary

This report presents the process of exchanging BIM models between Allplan and Revit, in particular emphasizing the limitations of the modifiability of geometry. The report is based on two BIM models of a bridge at two different design stages provided by professional engineering consultancies. For the analyzed models, the desired design-to-design exchange using IFC4 Design Transfer View which allows geometric modifications of a model after its hand-over to another design application could not be tested. A number of reasons contributes to this. In the Revit-to-Allplan exchange, the problem is that Allplan does not support the import of IFC4[4], and Revit translates the geometry of almost all components (except piles modeled as extrusions) into explicit forms (Breps). In the Allplan-to-Revit exchange, Allplan does not offer to specify a model view definition during the IFC 4 export (the "unknown" view is only possible) and the geometry of the entities is translated into Breps.

Instead, in the Revit-to-Allplan exchange, the "IFC 2x3 Coordination 2.0 View" can be used. The exchange has shown that all the elements imported into Allplan could be made modifiable (via control points) by exporting them with a proper component type (IfcWall, IfcColumn…) even though their geometric representation is Brep. This means that geometric modifiability of imported components in Allplan depends on both the geometric representation of a component and the component type.

The exchange in the opposite direction (Allplan-to-Revit) is possible using both IFC 4 or IFC 2x3 as Allplan supports exporting its model to both IFC 4 and 2x3 versions and Revit supports their import. However, the Model View Definition for the export using IFC 4 in Allplan is unknown. The Allplan-IFC-Revit exchange has shown that geometric modifications of imported elements in Revit seem to depend solely on the type of geometric representation of entities (and not on their component types as it is the case for imported elements in Allplan). The piles modeled in Allplan as cylinders have proved to be the only objects which could be modifiable by control points in Revit even though their geometric representations were Breps. The other elements could not be modified because either Revit did not provide this possibility (in case of tessellated elements) or they were unable to maintain their shape while any attempt of geometric modification (in case of non-tessellated beams).

In the report, elements modelled by means of the predefined types of the BIM design applications have not been investigated as neither of the provided BIM models contained them.

[4] The support for import of IFC4 files is expected in Allplan 2018-1-0.

References

[1] T. Liebich, "IFC-Workflow Revit SMC + BIMQ," AEC3 GmbH, 2017.

[2] buildingSMART, "IFC4 Design Transfer View," [Online]. Available: http://www.buildingsmart-tech.org/specifications/ifc-view-definition/ifc4-design-transfer-view. [Accessed 26 January 2018].

[3] Autodesk Knowledge Network, "IFC Export Setup Options," [Online]. Available: https://knowledge.autodesk.com/support/revit-products/learn-explore/caas/CloudHelp/cloudhelp/2018/ENU/Revit-DocumentPresent/files/GUID-E029E3AD-1639-4446-A935-C9796BC34C95-htm.html. [Accessed 25 January 2018].

[4] Autodesk Knowledge Network, "Load and Modify an IFC Mapping File," [Online]. Available: https://knowledge.autodesk.com/support/revit-products/learn-explore/caas/CloudHelp/cloudhelp/2018/ENU/Revit-DocumentPresent/files/GUID-B85CE60D-2868-427E-A37C-37C4F09D6016-htm.html. [Accessed 25 January 2018].

[5] Allplan GmbH, "Allplan’s online help," [Online]. Available: http://help.allplan.com/Allplan/2018-0/1033/Allplan/index.htm#5464.htm. [Accessed 5 February 2018].